M3/2 Boltwork

Boltwork throw: 21,3 mm
Mounting: Welding
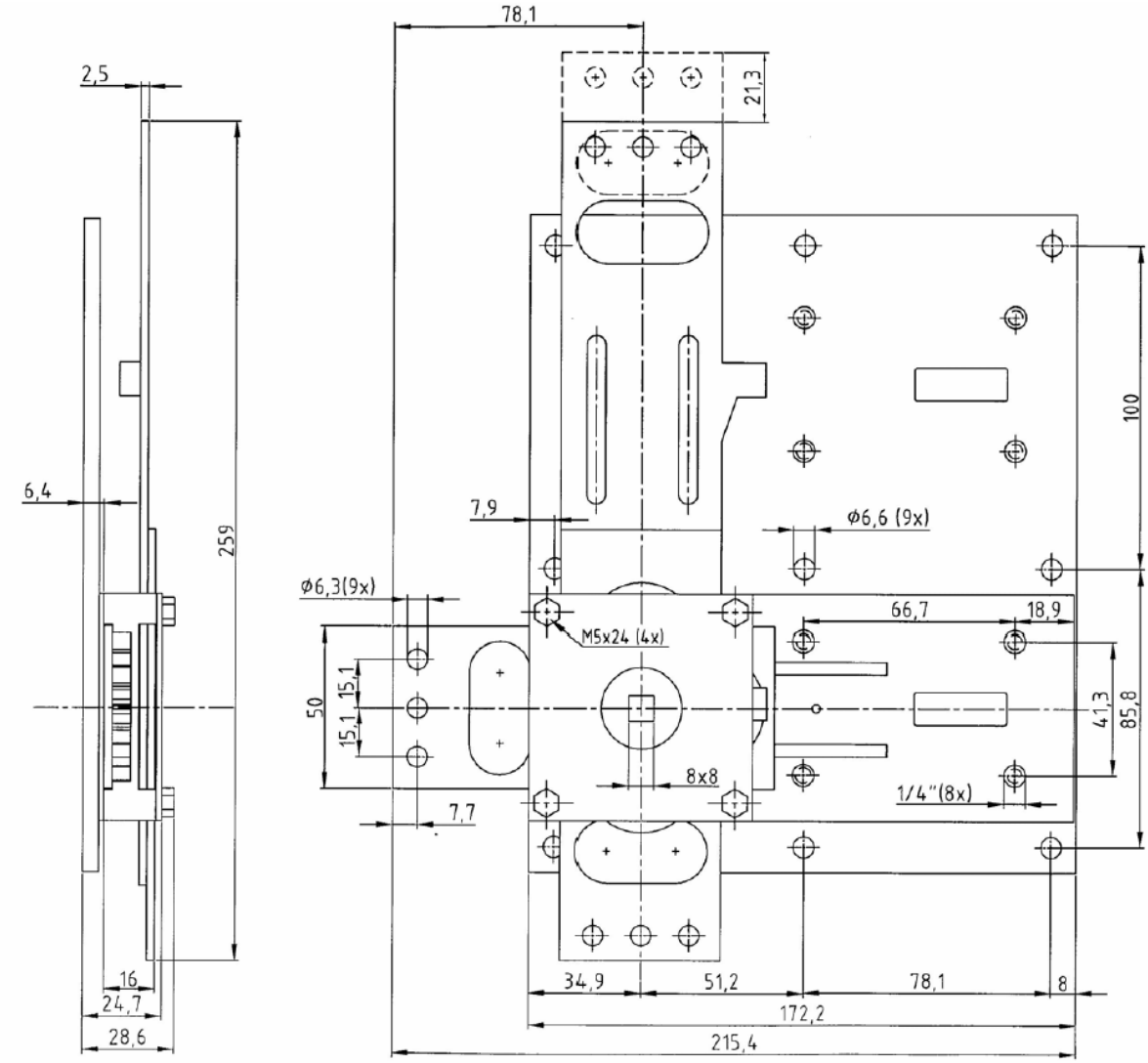
M3/2 boltwork has space for 2 locks and can be mounted with any lock from KG Group's range except EM15-20 DirectDrive. Only one lock in the door is necessary. Boltwork is equipped with a locking device pin. Bolt work can be ordered with a pre-mounted lock, complementing handle or the optional drill protection managanese plate.